Materials comply with the requirements of NACE MR 01 75 (2002)

Notice:
Eyebolt for 4"&Larger

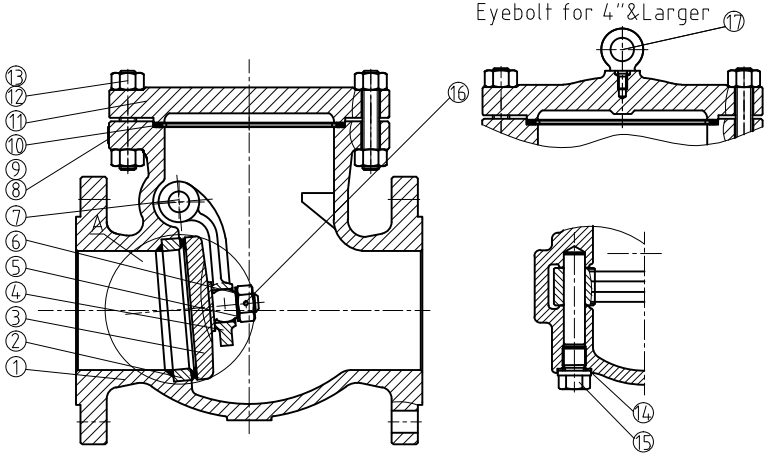

ITEM	NAME	STANDARD MATERIAL SPECITICATIONS		
		API TRIM 8	API TRIM 5	API TRIM 16
1	BODY	ASTM A216 WCB	ASTM A216 WCB	ASTM A352 LCC
2	SEAT	ASTM A105+STL.6	ASTM A105+STL.6	ASTM A350 LF2+STL.6
3	DISC	ASTM A105+ER410	ASTM A105+STL.6	ASTM A350 LF2+STL.6
4	HINGE	ASTM A216 WCB	ASTM A216 WCB	ASTM A352 LCC
5	GASKET	ASTM A276 410	ASTM A276 410	ASTM A276 316
6	NUT	ASTM A276 410	ASTM A276 410	ASTM A276 316
7	PIN	ASTM A182 F6	ASTM A182 F6	ASTM A276 316
8	RIVET	AISI 304	AISI 304	AISI 304
9	NAME PLATE	AISI 304	AISI 304	AISI 304
10	GASKET	F304+FLEXIBLE GRAPHITE	F304+FLEXIBLE GRAPHITE	F316+FLEXIBLE GRAPHITE
11	BONNET	ASTM A216 WCB	ASTM A216 WCB	ASTM A352 LCC
12	BOLT	ASTM A193-B7M	ASTM A193-B7M	ASTM A320-L7M
13	NUT	ASTM A194-2HM	ASTM A194-2HM	ASTM A194-4M
14	GASKET	AISI 304	AISI 304	AISI 304
15	PLUG	ASTM A276 410	ASTM A276 410	ASTM A276 316
16	PIN	AISI 304	AISI 304	AISI 304
17	EYEBOLT	CARBON STEEL	CARBON STEEL	CARBON STEEL
18	GASKET	F304+FLEXIBLE GRAPHITE	F304+FLEXIBLE GRAPHITE	F316+FLEXIBLE GRAPHITE
19	GLAND	ASTM A105	ASTM A105	ASTM A105
20	BOLT	ASTM A193-B7M	ASTM A193-B7M	ASTM A320-L7M

A WCBWC6LCB

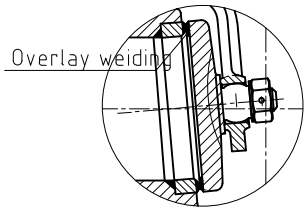

A CF8MCF8

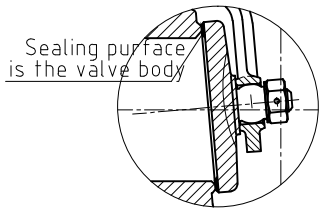

Notice:
Gland for 16"&Larger

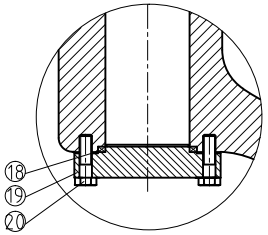

SUITABLE TEMP(℃)	WCB	LCC
ASME B16.34	-29to+425Deg C	-46to+345 Deg C
EU-PED	-5to+425Deg C	-46to+345Deg C
	WATER,STEAM,OIL	

TEST PRESSURE TO API 598 & ASME B16.34		
TEMPERATURE (0~38℃)	WCB	LCC
SHELL TEST (Bar)	153.1	155.1
BACK SHELL TEST(Bar)	112.3	113.7
SEAL TEST (Bar)	112.3	113.7

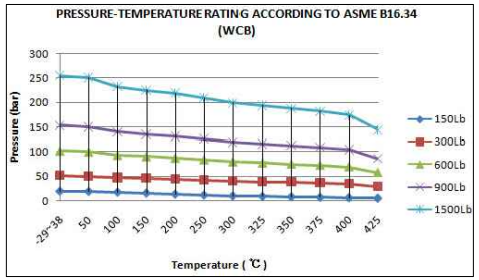

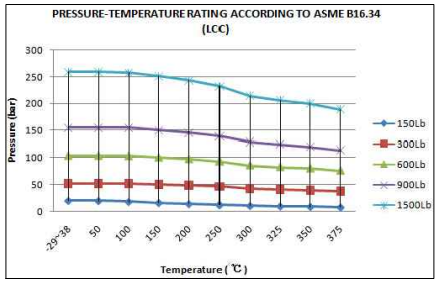

PROJECT:	----
CLIENT:	----
T.T. REF:	----
ITEM:	----

REV.	DATE	DRAWN	CHECKED

TT Valves UK Ltd

	DATE	NAME
TRACED		
CHECKED		

CHECK VALVE
CLASS-600

SCALE	DRAWING No :	REV:
---		0