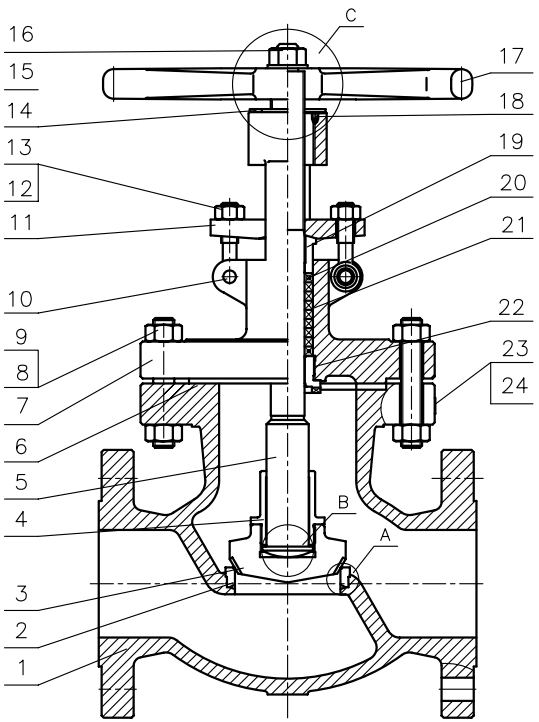


Materials comply with the requirements of NACE MR 01 75 (2002)

A Notice:

Threaded Seat for 2"–4"

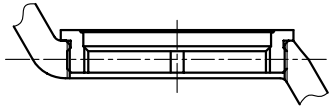

B Notice:

Thrust Plate for 2"–6"

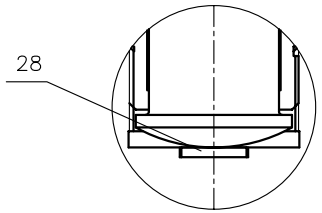


C Notice:

Impact Handwheel for 4"&Larger

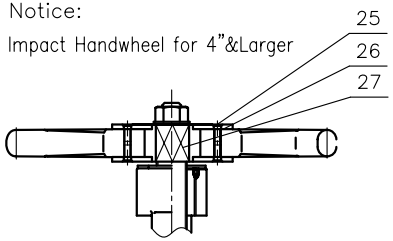


| ITEM | NAME | STANDARD MATERIAL SPECITICATIONS | | |
|---|---|---|---|---|
| | | API TRIM 8 | API TRIM 5 | API TRIM 16 |
| 1 | BODY | ASTM A216 WCB | ASTM A216 WCB | ASTM A352 LCC |
| 2 | SEAT | ASTM A105+STL.6 | ASTM A105+STL.6 | ASTM A350 LF2+STL.6 |
| 3 | DISC | ASTM A105+ER410 | ASTM A105+STL.6 | ASTM A350 LF2+STL.6 |
| 4 | DISC COVER | ASTM A276 410 | ASTM A276 410 | ASTM A276 316 |
| 5 | STEM | ASTM A182 F6a | ASTM A182 F6a | ASTM A182 F316 |
| 6 | GASKET | F304+Flexible Graphite | F304+Flexible Graphite | F316+Flexible Graphite |
| 7 | BONNET | ASTM A216 WCB | ASTM A216 WCB | ASTM A352 LCC |
| 8 | BOLT | ASTM A193 B7M | ASTM A193 B7M | ASTM A320 L7M |
| 9 | NUT | ASTM A194 2HM | ASTM A194 2HM | ASTM A194 4M |
| 10 | PIN | CARBON STEEEL | CARBON STEEEL | CARBON STEEEL |
| 11 | GLAND FLANGE | ASTM A216 WCB | ASTM A216 WCB | ASTM A352 LCC |
| 12 | EYE BLOT | ASTM A193 B7M | ASTM A193 B7M | ASTM A320 L7M |
| 13 | EYE NUT | ASTM A194 2HM | ASTM A194 2HM | ASTM A194 4M |
| 14 | STEM NUT | ASTM A439 D–2 | ASTM A439 D–2 | ASTM A439 D–2 |
| 15 | GASKET | ASTM A276 410 | ASTM A276 410 | ASTM A276 316 |
| 16 | NUT | CARBON STEEL | CARBON STEEL | CARBON STEEL |
| 17 | HANDWHEEL | Ductile Iron | Ductile Iron | Ductile Iron |
| 18 | SCREW | CARBON STEEL | CARBON STEEL | CARBON STEEL |
| 19 | GLAND | ASTM A276 410 | ASTM A276 410 | ASTM A276 316 |
| 20 | PACKING | F304+Graphite | F304+Graphite | F316+Graphite |
| 21 | PACKING | Flexible Graphite | Flexible Graphite | Flexible Graphite |
| 22 | BACK SEAT | ASTM A276 410 | ASTM A276 410 | ASTM A276 316 |
| 23 | RIVET | AISI 304 | AISI 304 | AISI 304 |
| 24 | NAME PLATE | AISI 304 | AISI 304 | AISI 304 |
| 25 | SCREW | CARBON STEEL | CARBON STEEL | CARBON STEEL |
| 26 | BAFFLE | CARBON STEEL | CARBON STEEL | CARBON STEEL |
| 27 | IMPACT PIECE | CARBON STEEL | CARBON STEEL | CARBON STEEL |
| 28 | THRUST PLATE | ASTM A276 410 | ASTM A276 410 | ASTM A276 316 |

| SUITABLE TEMP(℃) | WCB | LCC |
|---|---|---|
| ASME B16.34 | –29to+425Deg C | –46to+345 Deg C |
| EU–PED | –5to+425Deg C | –46to+345Deg C |
| | WATER,STEAM,OIL | |

| TEST PRESSURE TO API 598 & ASME B16.34 | | |
|---|---|---|
| TEMPERATURE ( 0~38℃ ) | WCB | LCC |
| SHELL TEST (Bar) | 153.1 | 155.1 |
| BACK SHELL TEST(Bar) | 112.3 | 113.7 |
| SEAL TEST (Bar) | 112.3 | 113.7 |

**PRESSURE–TEMPERATURE RATING ACCORDING TO ASME B16.34**

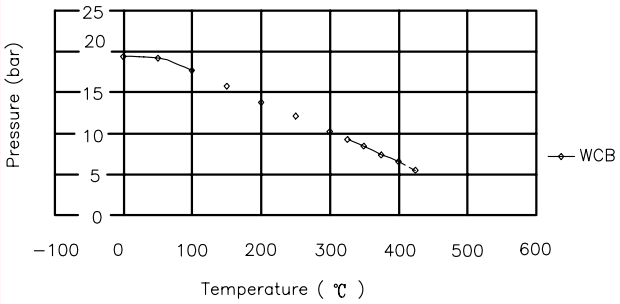


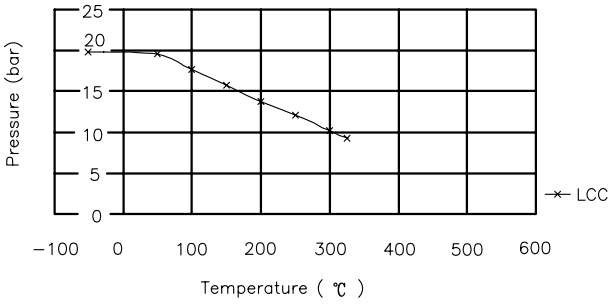


| | |
|---|---|
| PROJECT: | ---- |
| CLIENT: | ---- |
| T.T. REF: | ---- |
| ITEM: | ---- |

| REV. | DATE | DRAWN | CHECKED |
|---|---|---|---|
| | 9-26-2015 | WB | JT |

# TT Valves UK Ltd

| | DATE | NAME |
|---|---|---|
| TRACED | | |
| CHECKED | | |

GLOBE VALVE
CLASS–600

| SCALE | DRAWING No : | REV: |
|---|---|---|
| --- | | 0 |

Materials comply with the requirements of NACE MR 01 75 (2002)

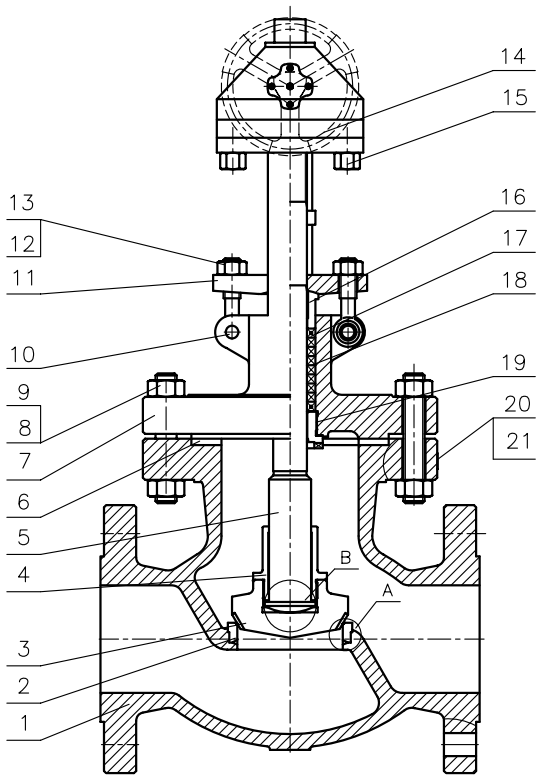


Notice:
Gear for 8"&Larger

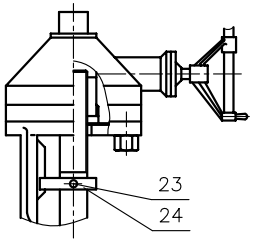


A Notice:
Threaded Seat for 2"–4"

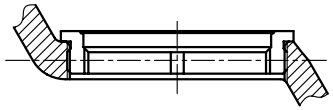

B Notice:
Thrust Plate for 2"–6"

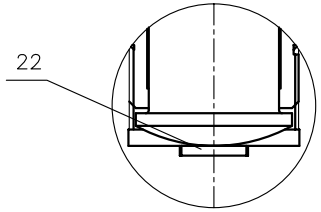


| ITEM | NAME | STANDARD MATERIAL SPECITICATIONS | | |
|---|---|---|---|---|
| | | API TRIM 8 | API TRIM 5 | API TRIM 16 |
| 1 | BODY | ASTM A216 WCB | ASTM A216 WCB | ASTM A352 LCC |
| 2 | SEAT | ASTM A105+STL.6 | ASTM A105+STL.6 | ASTM A350 LF2+STL.6 |
| 3 | DISC | ASTM A105+ER410 | ASTM A105+STL.6 | ASTM A350 LF2+STL.6 |
| 4 | DISC COVER | ASTM A276 410 | ASTM A276 410 | ASTM A276 316 |
| 5 | STEM | ASTM A182 F6a | ASTM A182 F6a | ASTM A182 F316 |
| 6 | GASKET | F304+Flexible Graphite | F304+Flexible Graphite | F316+Flexible Graphite |
| 7 | BONNET | ASTM A216 WCB | ASTM A216 WCB | ASTM A352 LCC |
| 8 | BOLT | ASTM A193 B7M | ASTM A193 B7M | ASTM A320 L7M |
| 9 | NUT | ASTM A194 2HM | ASTM A194 2HM | ASTM A194 4M |
| 10 | PIN | CARBON STEEEL | CARBON STEEEL | CARBON STEEEL |
| 11 | GLAND FLANGE | ASTM A216 WCB | ASTM A216 WCB | ASTM A352 LCC |
| 12 | EYE BLOT | ASTM A193 B7M | ASTM A193 B7M | ASTM A320 L7M |
| 13 | EYE NUT | ASTM A194 2HM | ASTM A194 2HM | ASTM A194 4M |
| 14 | GEAR BOX | COMMERCIAL | | |
| 15 | BOLT | CARBON STEEEL | CARBON STEEEL | CARBON STEEEL |
| 16 | GLAND | ASTM A276 410 | ASTM A276 410 | ASTM A276 316 |
| 17 | PACKING | F304+Graphite | F304+Graphite | F316+Graphite |
| 18 | PACKING | Flexible Graphite | Flexible Graphite | Flexible Graphite |
| 19 | BACK SEAT | ASTM A276 410 | ASTM A276 410 | ASTM A276 316 |
| 20 | RIVET | AISI 304 | AISI 304 | AISI 304 |
| 21 | NAME PLATE | AISI 304 | AISI 304 | AISI 304 |
| 22 | THRUST PLATE | ASTM A276 410 | ASTM A276 410 | ASTM A276 316 |
| 23 | PIN | CARBON STEEEL | CARBON STEEEL | CARBON STEEEL |
| 24 | GUIDE | CARBON STEEEL | CARBON STEEEL | CARBON STEEEL |

| SUITABLE TEMP(℃) | WCB | LCC |
|---|---|---|
| ASME B16.34 | –29to+425Deg C | –46to+345 Deg C |
| EU–PED | –5to+425Deg C | –46to+345Deg C |
| | WATER,STEAM,OIL | |

| TEST PRESSURE TO API 598 & ASME B16.34 | | |
|---|---|---|
| TEMPERATURE ( 0~38℃ ) | WCB | LCC |
| SHELL TEST (Bar) | 153.1 | 155.1 |
| BACK SHELL TEST(Bar) | 112.3 | 113.7 |
| SEAL TEST (Bar) | 112.3 | 113.7 |

**PRESSURE–TEMPERATURE RATING ACCORDING TO ASME B16.34**

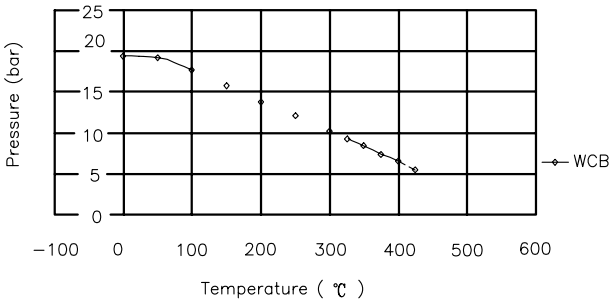


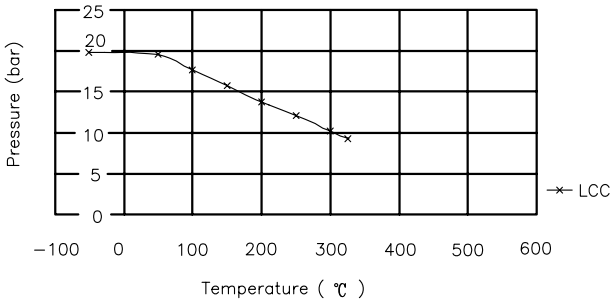


| | |
|---|---|
| PROJECT: | ---- |
| CLIENT: | ---- |
| T.T. REF: | ---- |
| ITEM: | ---- |

| REV. | DATE | DRAWN | CHECKED |
|---|---|---|---|
| | 9-26-2015 | WB | JT |

# TT Valves UK Ltd

| | DATE | NAME |
|---|---|---|
| TRACED | | |
| CHECKED | | |

GLOBE VALVE
CLASS–600

| SCALE | DRAWING No : | REV: |
|---|---|---|
| --- | | 0 |

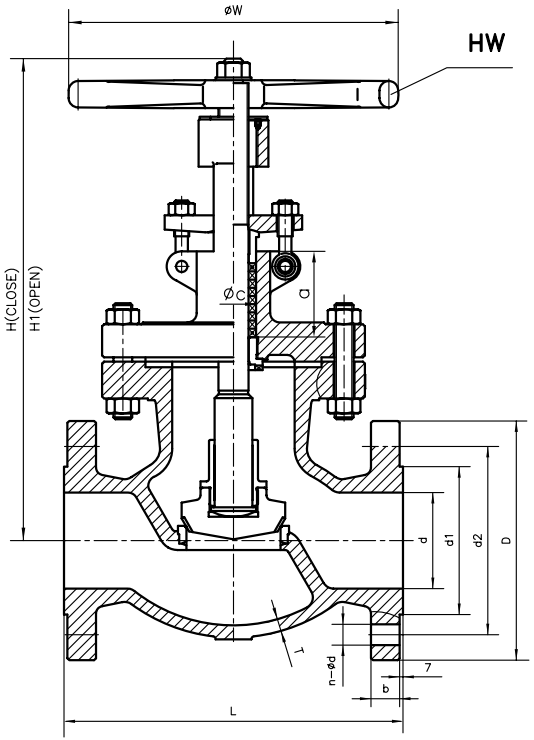


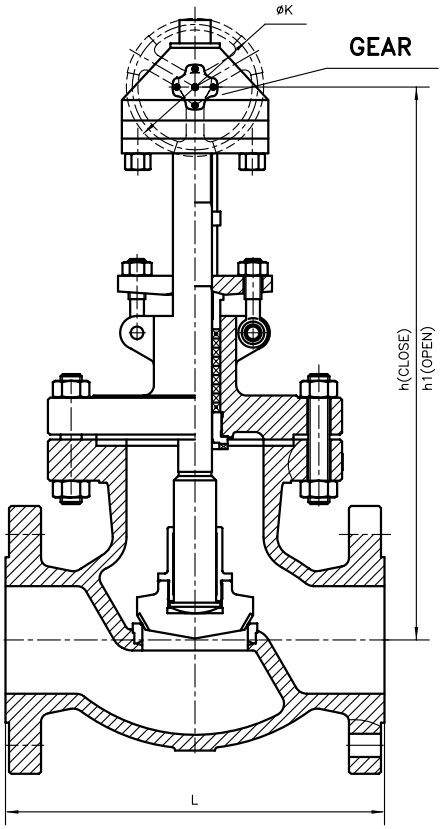


BW

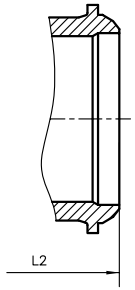


RTJ

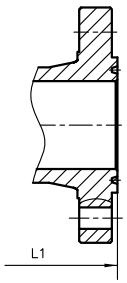


| STANDARD | |
|---|---|
| FACE TO FACE | ASME B16.10 |
| FLANGE ENDS | ASME B16.5 |
| DESIGN STANDARDS | BS 1873 |
| TESTING | API 598 |

| SIZE | øc | a | PACKING RING | NO. | MATERIAL |
|---|---|---|---|---|---|
| 2" | 37 | 64 | 24X6.4 | 6 | GRAPHITE |
| 3" | 48 | 93 | 32X8 | 7 | GRAPHITE |
| 4" | 52 | 87 | 36X7.9 | 7 | GRAPHITE |
| 5" | 67 | 88 | 48X9.5 | 6 | GRAPHITE |
| 6" | 78 | 101.5 | 52X12.9 | 6 | GRAPHITE |
| 8" | 86 | 118.5 | 60X12.7 | 6 | GRAPHITE |
| 10" | 86 | 118.5 | 60X13 | 7 | GRAPHITE |
| 12" | 96 | 125.5 | 70X12.7 | 7 | GRAPHITE |

| SIZE | FLANGE DIMENSIONS | | | | | | BONNET BOLT (MATERIAL B7) |
|---|---|---|---|---|---|---|---|
| | ød | ød1 | ød2 | D | b | n-ød | |
| 2" | 51 | 92 | 127 | 165 | 26 | 8-ø19 | 5/8X100 |
| 3" | 76 | 127 | 168 | 210 | 32 | 8-ø22 | 3/4X125 |
| 4" | 102 | 157 | 216 | 273 | 38 | 8-ø25 | 7/8X135 |
| 5" | 127 | 186 | 266.5 | 330 | 45 | 8-ø29 | 1X155 |
| 6" | 152 | 216 | 292 | 356 | 48 | 12-ø29 | 7/8X160 |
| 8" | 200 | 270 | 349 | 419 | 56 | 12-ø32 | 1X185 |
| 10" | 248 | 324 | 432 | 508 | 64 | 16-ø35 | 1 1/8X205 |
| 12" | 298 | 381 | 489 | 559 | 67 | 20-ø35 | 1 3/8X225 |

| SIZE | DIMENSIONS (mm) | | | | | | | WEIGHTS(kg) | | FACE TO FACE(mm) | | |
|---|---|---|---|---|---|---|---|---|---|---|---|---|
| | T | H | H1 | h | h1 | W | K | HW | GEAR | L | L1 | L2 |
| 2" | 11.1 | 372 | 472 | / | / | 250 | / | 17 | / | 292 | 295 | 292 |
| 3" | 14 | 521 | 550 | / | / | 350 | / | 36 | / | 356 | 359 | 356 |
| 4" | 15.9 | 620 | 660 | / | / | 400 | / | 46 | / | 432 | 435 | 432 |
| 5" | 18 | 625 | 689 | / | / | 450 | / | 77 | / | 508 | 511 | 508 |
| 6" | 22 | 618 | 702 | / | / | 500 | / | 77 | / | 559 | 562 | 559 |
| 8" | 26 | 932 | 1010 | 755 | 972 | 560 | 710 | 116 | 710 | 660.4 | 664 | 660 |
| 10" | 29 | 905 | 997 | 904 | 1179 | 640 | 710 | 202 | 220 | 787.4 | 791 | 787 |
| 12" | 31.8 | 1123 | 1260 | 1030 | 1351 | 700 | 710 | 294 | 323 | 838 | 841 | 838 |

PROJECT: ----
CLIENT: ----
T.T. REF: ----
ITEM: ----

# TT Valves UK Ltd

| | DATE | NAME |
|---|---|---|
| TRACED | | |
| CHECKED | | |

GLOBE VALVE
CLASS-600

| REV. | DATE | DRAWN | CHECKED |
|---|---|---|---|
| | 9-26-2015 | WB | JT |

SCALE: ---
DRAWING No :
REV: 0