Materials comply with the requirements of NACE MR 01 75 (2002)

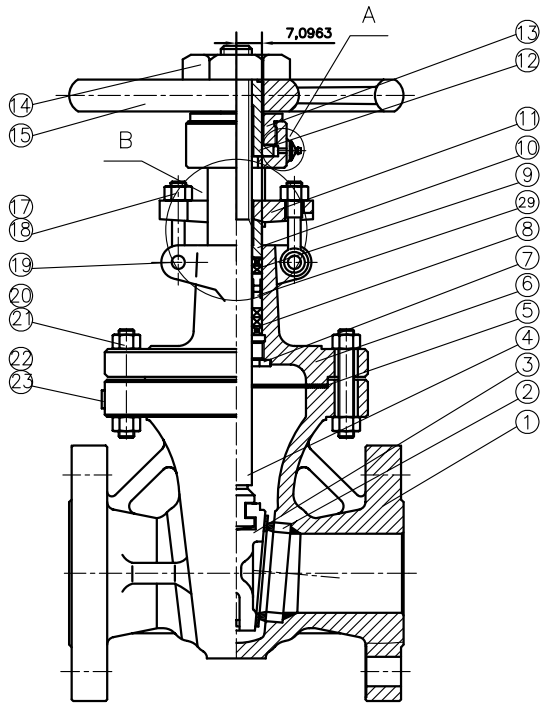

A Notice:
Bearing for 12"&Larger

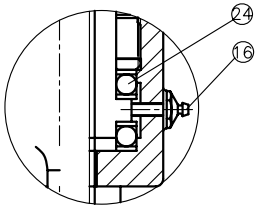

B Notice:
Yoke for 12"&Larger

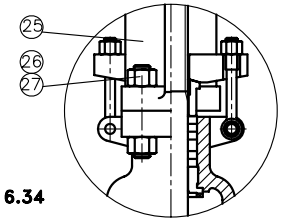

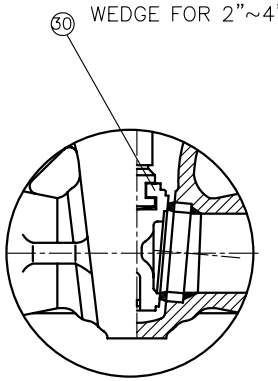

ITEM	NAME	STANDARD MATERIAL SPECITICATIONS		
		API TRIM 8	API TRIM 5	API TRIM 16
1	BODY	ASTM A216 WCB	ASTM A216 WCB	ASTM A352 LCC
2	SEAT	ASTM A105+STL.6	ASTM A105+STL.6	ASTM A350 LF2+STL.6
3	WEDGE	ASTM A216 WCB+ER410	ASTM A216 WCB+STL.6	ASTM A352 LCC+STL.6
4	STEM	ASTM A182 F6a	ASTM A182 F6a	ASTM A182 F316
5	GASKET	F304+FLEXIBLE GRAPHITE	F304+FLEXIBLE GRAPHITE	F316+FLEXIBLE GRAPHITE
6	BONNET	ASTM A216 WCB	ASTM A216 WCB	ASTM A352 LCC
7	BACK SEAT	ASTM A276 410	ASTM A276 410	ASTM A276 316
8	GLAND PACKING	F304+GRAPHITE	F304+GRAPHITE	F316+GRAPHITE
9	GLAND PACKING	FLEXIBLE GRAPHITE	FLEXIBLE GRAPHITE	FLEXIBLE GRAPHITE
10	GLAND	ASTM A276 410	ASTM A276 410	ASTM A276 316
11	GLAND FLANGE	ASTM A216 WCB	ASTM A216 WCB	ASTM A352 LCC
12	STEM NUT	ASTM A439-D2	ASTM A439-D2	ASTM A439-D2
13	GLAND NUT	Carbon Steel	Carbon Steel	Carbon Steel
14	HANDWHEEL	Ductile Iron	Ductile Iron	Ductile Iron
15	LOCK NUT	Carbon Steel	Carbon Steel	Carbon Steel
16	Grease Nipple	Carbon Steel	Carbon Steel	Carbon Steel
17	EYE BOLT	ASTM A193-B7M	ASTM A193-B7M	ASTM A320-L7M
18	EYE NUT	ASTM A194-2HM	ASTM A194-2HM	ASTM A194-4M
19	PIN	Carbon Steel	Carbon Steel	Carbon Steel
20	BOLT	ASTM A193-B7M	ASTM A193-B7M	ASTM A320-L7M
21	NUT	ASTM A194-2HM	ASTM A194-2HM	ASTM A194-4M
22	NAME PLATE	AISI 304	AISI 304	AISI 304
23	RIVET	AISI 304	AISI 304	AISI 304
24	BEARING			
25	YOKE	ASTM A216 WCB	ASTM A216 WCB	ASTM A352 LCC
26	YOKE STUD	ASTM A193 B7M	ASTM A193 B7M	ASTM A320 L7M
27	YOKE NUT	ASTM A194 2HM	ASTM A194 2HM	ASTM A194 4M
29	DISTANCE RING	ASTM A276 410	ASTM A276 410	ASTM A276 316
30	WEDGE	ASTM A217 CA15		

PRESSURE-TEMPERATURE RATING ACCORDING TO ASME B16.34

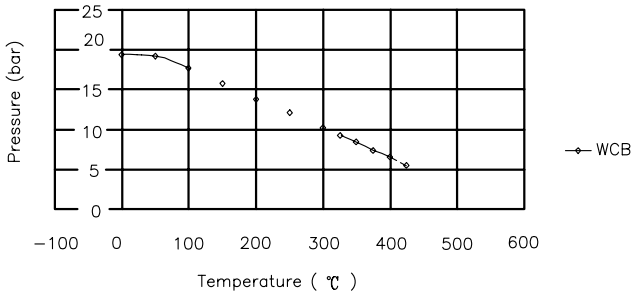

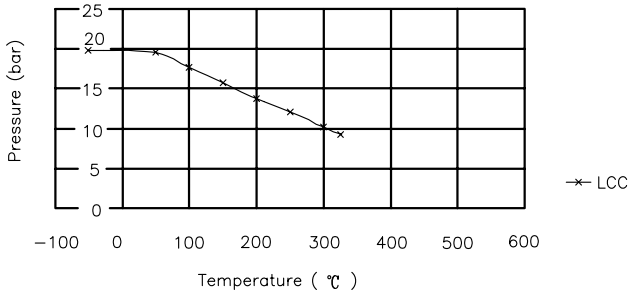

SUITABLE TEMP(℃)	WCB	LCC
ASME B16.34	-29to+425Deg C	-46to+345 Deg C
EU-PED	-5to+425Deg C	-46to+345Deg C
	WATER,STEAM,OIL	

TEST PRESSURE TO API 598 & ASME B16.34		
TEMPERATURE (0~38℃)	WCB	LCC
SHELL TEST (Bar)	76.7	77.6
BACK SHELL TEST(Bar)	56.2	56.9
SEAL TEST (Bar)	56.2	56.9

PROJECT:	----
CLIENT:	----
T.T. REF:	----
ITEM:	----

REV.	DATE	DRAWN	CHECKED
	9-29-2015	WB	JT

TT Valves UK Ltd

	DATE	NAME
TRACED		
CHECKED		

GATE VALVE
CLASS-300

SCALE	DRAWING No :	REV:
---		0

Materials comply with the requirements of NACE MR 01 75 (2002)

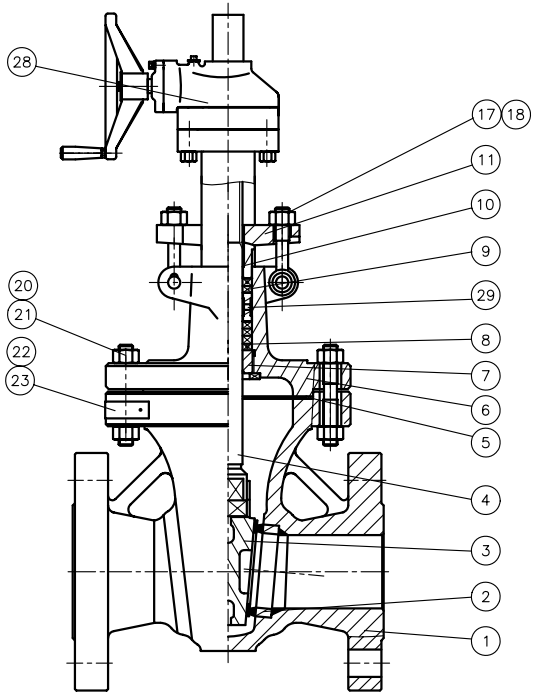

B Notice:
Yoke for 12"&Larger

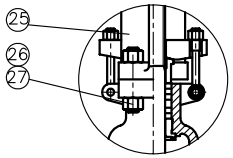

ITEM	NAME	STANDARD MATERIAL SPECITICATIONS		
		API TRIM 8	API TRIM 5	API TRIM 16
1	BODY	ASTM A216 WCB	ASTM A216 WCB	ASTM A352 LCC
2	SEAT	ASTM A105+STL.6	ASTM A105+STL.6	ASTM A350 LF2+STL.6
3	WEDGE	ASTM A216 WCB+ER410	ASTM A216 WCB+STL.6	ASTM A352 LCC+STL.6
4	STEM	ASTM A182 F6a	ASTM A182 F6a	ASTM A182 F316
5	GASKET	F304+FLEXIBLE GRAPHITE	F304+FLEXIBLE GRAPHITE	F316+FLEXIBLE GRAPHITE
6	BONNET	ASTM A216 WCB	ASTM A216 WCB	ASTM A352 LCC
7	BACK SEAT	ASTM A276 410	ASTM A276 410	ASTM A276 316
8	GLAND PACKING	F304+GRAPHITE	F304+GRAPHITE	F316+GRAPHITE
9	GLAND PACKING	FLEXIBLE GRAPHITE	FLEXIBLE GRAPHITE	FLEXIBLE GRAPHITE
10	GLAND	ASTM A276 410	ASTM A276 410	ASTM A276 316
11	GLAND FLANGE	ASTM A216 WCB	ASTM A216 WCB	ASTM A352 LCC
17	EYE BOLT	ASTM A193-B7M	ASTM A193-B7M	ASTM A320-L7M
18	EYE NUT	ASTM A194-2HM	ASTM A194-2HM	ASTM A194-4M
19	PIN	Carbon Steel	Carbon Steel	Carbon Steel
20	BOLT	ASTM A193-B7M	ASTM A193-B7M	ASTM A320-L7M
21	NUT	ASTM A194-2HM	ASTM A194-2HM	ASTM A194-4M
22	NAME PLATE	AISI 304	AISI 304	AISI 304
23	RIVET	AISI 304	AISI 304	AISI 304
25	YOKE	ASTM A216 WCB	ASTM A216 WCBM	ASTM A352 LCC
26	YOKE STUD	ASTM A193 B7M	ASTM A193 B7M	ASTM A320 L7M
27	YOKE NUT	ASTM A194 2HM	ASTM A194 2HM	ASTM A194 4M
28	GEAR	COMMERCIAL		
29	DISTANCE RING	ASTM A276 410	ASTM A276 410	ASTM A276 316

PRESSURE-TEMPERATURE RATING ACCORDING TO ASME B16.34

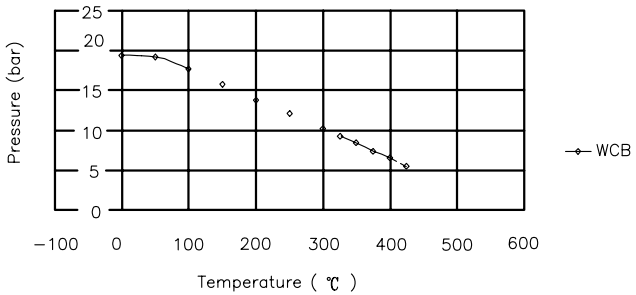

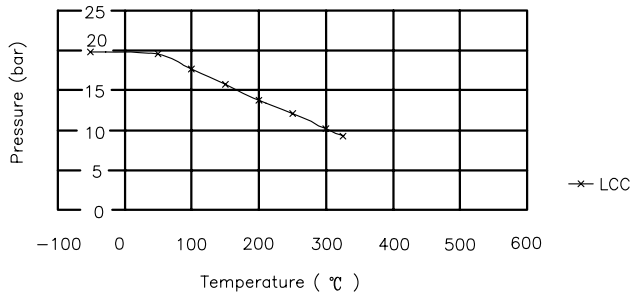

SUITABLE TEMP(℃)	WCB	LCC
ASME B16.34	-29to+425Deg C	-46to+345 Deg C
EU-PED	-5to+425Deg C	-46to+345Deg C
	WATER,STEAM,OIL	

TEST PRESSURE TO API 598 & ASME B16.34		
TEMPERATURE (0~38℃)	WCB	LCC
SHELL TEST (Bar)	76.7	77.6
BACK SHELL TEST(Bar)	56.2	56.9
SEAL TEST (Bar)	56.2	56.9

PROJECT:	----
CLIENT:	----
T.T. REF:	----
ITEM:	----

REV.	DATE	DRAWN	CHECKED
	9-29-2015	WB	JT

TT Valves UK Ltd

	DATE	NAME
TRACED		
CHECKED		

GATE VALVE
CLASS-300

SCALE	DRAWING No :	REV:
---		0

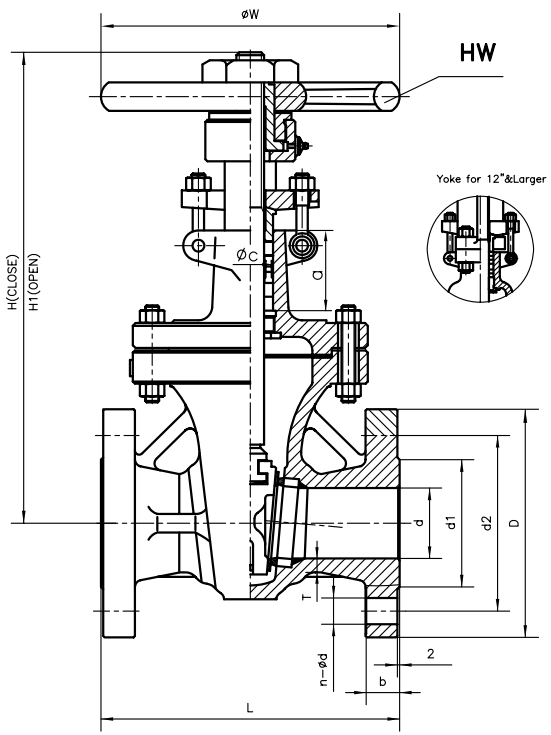

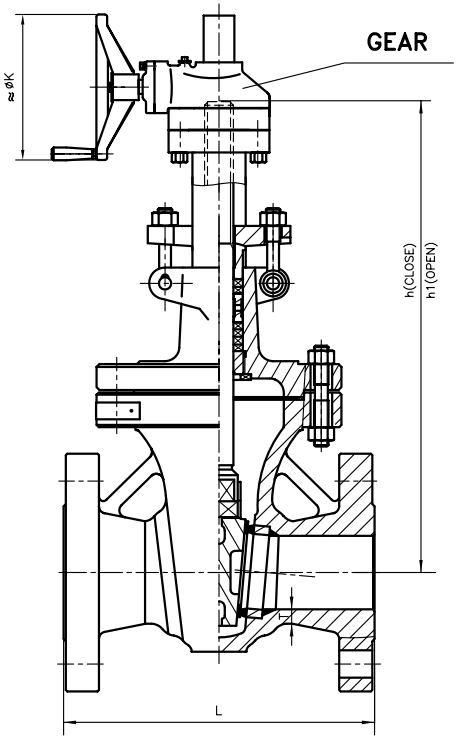

STANDARD	
FACE TO FACE	ASME B16.10
FLANGE ENDS	ASME B16.5
DESIGN STANDARDS	API 600
TESTING	API 598

SIZE	Øc	a	PACKING RING	NO.	MATERIAL
2"	33	49	20X6.4	5	GRAPHITE
3"	37	68	24X6.4	6	GRAPHITE
4"	39	59	26X6.5	6	GRAPHITE
5"	46	67	30X7.9	6	GRAPHITE
6"	48	64	32X7.9	6	GRAPHITE
8"	52	68.5	36X7.9	6	GRAPHITE
10"	59	72	40X9.5	5	GRAPHITE
12"	61	86	42X9.5	7	GRAPHITE
14"	65	99	46X9.5	7	GRAPHITE
16"	67	94	48X9.5	6	GRAPHITE
18"	78	111	52X13	6	GRAPHITE
20"	80	132	54X12.9	7	GRAPHITE
24"	91	117	65X12.9	6	GRAPHITE

BW

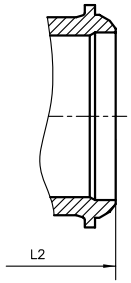

RTJ

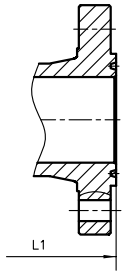

SIZE	FLANGE DIMENSIONS						BONNET BOLT (MATERIAL B7)
	Ød	Ød1	Ød2	D	b	n–Ød	
2"	51	92	127	165	23	8–Ø19	9/16X85
3"	76	127	168.5	210	29	8–Ø22	5/8X100
4"	102	157	200	254	32	8–Ø22	5/8X105
5"	127	186	235	279	35	8–Ø22	5/8X105
6"	152	216	270	318	37	12–Ø22	5/8X120
8"	203	270	330	381	42	12–Ø25	3/4X135
10"	254	324	387.5	445	48	16–Ø29	3/4X150
12"	305	381	451	521	51	16–Ø32	1X165
14"	337	413	514.5	584	54	20–Ø32	1X175
16"	387	470	571.5	648	58	20–Ø35	1 1/4X195
18"	432	533	629	711	61	24–Ø35	1 1/8X200
20"	482	584	686	775	64	24–Ø35	1 1/8X205
24"	584.5	692.2	812.8	914	70	24–Ø41	1 3/8X240

SIZE	DIMENSIONS (mm)							WEIGHTS(kg)		FACE TO FACE(mm)		
	T	H	H1	h	h1	W	K	HW	GEAR	L	L1	L2
2"	10	357	426	/	/	200	/	30	/	216	232	216
3"	12	435	530	/	/	250	/	55	/	283	298	283
4"	13	498	616	/	/	250	/	83	/	305	321	305
5"	14.5	553	698	/	/	300	/	108	/	381	397	381
6"	16	665	827	665	827	350	310	137	147	403.4	419	403
8"	17.5	782	1004	782	1004	400	460	240	253	419.1	435	419
10"	19.5	933	1201	933	1200	450	460	333	353	457.2	473	457
12"	21	1079	1411	1079	1412	500	460	536	550	502	518	502
14"	22.5	1185	1542	1185	1543	640	460	699	720	762	778	762
16"	24	1326	1742	1329	1745	720	610	1010	1035	838	854	838
18"	25.4	1620	2089	1620	2089	720	610	1205	1225	914	930	914
20"	27	1638	2151	1637	2147	800	610	1720	1736	991	1010	991
24"	30.2	1973	2648	1925	2541	1100	710	2491	2506	1143	1165	1143

PROJECT:	----
CLIENT:	----
T.T. REF:	----
ITEM:	----

REV.	DATE	DRAWN	CHECKED
	9-29-2015	WB	JT

TT Valves UK Ltd

	DATE	NAME
TRACED		
CHECKED		

GATE VALVE
CLASS–300

SCALE	DRAWING No :	REV:
---		0