Materials comply with the requirements of NACE MR 01 75 (2002)

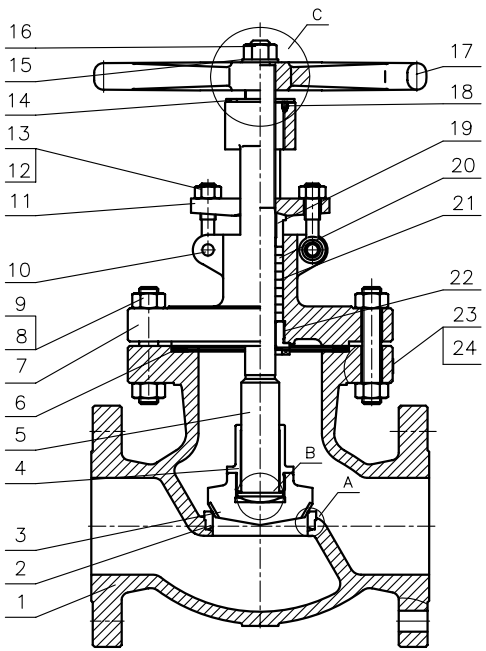

C Notice:

Impact Handwheel for 8"&Larger

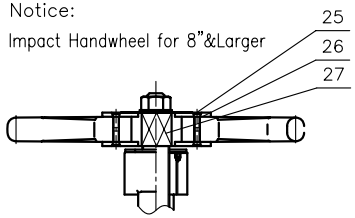

A Notice:

Threaded Seat for 2"–6"

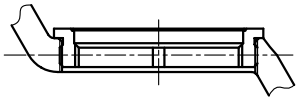

B Notice:

Thrust Plate for 2"–6"

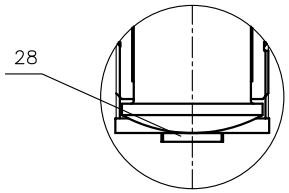

ITEM	NAME	STANDARD MATERIAL SPECITICATIONS		
		API TRIM 8	API TRIM 5	API TRIM 16
1	BODY	ASTM A216 WCB	ASTM A216 WCB	ASTM A352 LCC
2	SEAT	ASTM A105+STL.6	ASTM A105+STL.6	ASTM A350 LF2+STL.6
3	DISC	ASTM A105+ER410	ASTM A105+STL.6	ASTM A350 LF2+STL.6
4	DISC COVER	ASTM A276 410	ASTM A276 410	ASTM A276 316
5	STEM	ASTM A182 F6a	ASTM A182 F6a	ASTM A182 F316
6	GASKET	F304+Flexible Graphite	F304+Flexible Graphite	F316+Flexible Graphite
7	BONNET	ASTM A216 WCB	ASTM A216 WCB	ASTM A352 LCC
8	BOLT	ASTM A193 B7M	ASTM A193 B7M	ASTM A320 L7M
9	NUT	ASTM A194 2HM	ASTM A194 2HM	ASTM A194 4M
10	PIN	CARBON STEEEL	CARBON STEEEL	CARBON STEEEL
11	GLAND FLANGE	ASTM A216 WCB	ASTM A216 WCB	ASTM A352 LCC
12	EYE BLOT	ASTM A193 B7M	ASTM A193 B7M	ASTM A320 L7M
13	EYE NUT	ASTM A194 2HM	ASTM A194 2HM	ASTM A194 4M
14	STEM NUT	ASTM A439 D–2	ASTM A439 D–2	ASTM A439 D–2
15	GASKET	ASTM A276 410	ASTM A276 410	ASTM A276 316
16	NUT	CARBON STEEL	CARBON STEEL	CARBON STEEL
17	HANDWHEEL	Ductile Iron	Ductile Iron	Ductile Iron
18	SCREW	CARBON STEEL	CARBON STEEL	CARBON STEEL
19	GLAND	ASTM A276 410	ASTM A276 410	ASTM A276 316
20	PACKING	F304+Graphite	F304+Graphite	F316+Graphite
21	PACKING	Flexible Graphite	Flexible Graphite	Flexible Graphite
22	BACK SEAT	ASTM A276 410	ASTM A276 410	ASTM A276 316
23	RIVET	AISI 304	AISI 304	AISI 304
24	NAME PLATE	AISI 304	AISI 304	AISI 304
25	SCREW	CARBON STEEL	CARBON STEEL	CARBON STEEL
26	BAFFLE	CARBON STEEL	CARBON STEEL	CARBON STEEL
27	IMPACT PIECE	CARBON STEEL	CARBON STEEL	CARBON STEEL
28	THRUST PLATE	ASTM A276 410	ASTM A276 410	ASTM A276 316

PRESSURE–TEMPERATURE RATING ACCORDING TO ASME B16.34

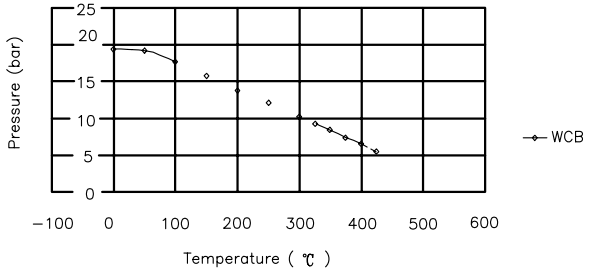

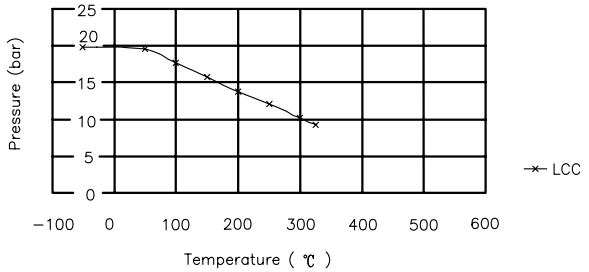

SUITABLE TEMP(℃)	WCB	LCC
ASME B16.34	–29to+425Deg C	–46to+345 Deg C
EU–PED	–5to+425Deg C	–46to+345Deg C
	WATER,STEAM,OIL	

TEST PRESSURE TO API 598 & ASME B16.34		
TEMPERATURE (0~38℃)	WCB	LCC
SHELL TEST (Bar)	29.4	29.7
BACK SHELL TEST(Bar)	21.6	21.8
SEAL TEST (Bar)	21.6	21.8

PROJECT:	----
CLIENT:	----
T.T. REF:	----
ITEM:	----

REV.	DATE	DRAWN	CHECKED
	9-26-2015	WB	JT

TT Valves UK Ltd

	DATE	NAME
TRACED		
CHECKED		

GLOBE VALVE
CLASS–150

SCALE	DRAWING No :	REV:
---		0

Materials comply with the requirements of NACE MR 01 75 (2002)

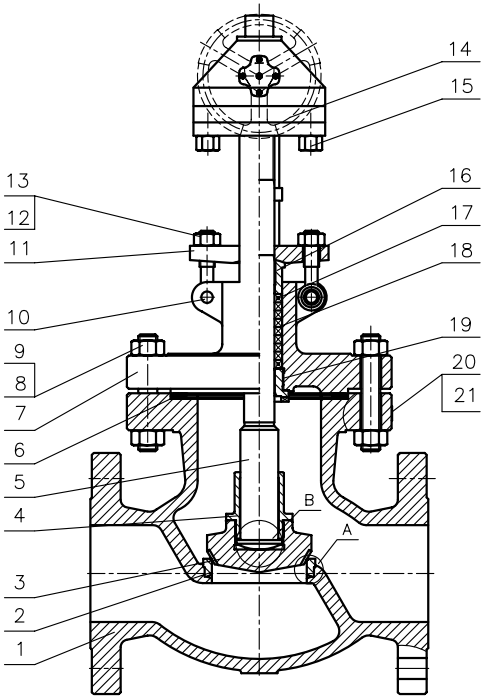

Notice:
Gear for 8"&Larger

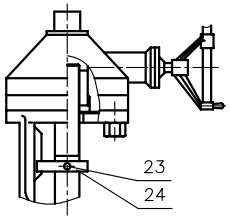

A Notice:
Threaded Seat for 2"–6"

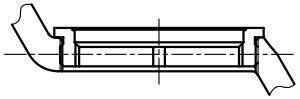

B Notice:
Thrust Plate for 2"–6"

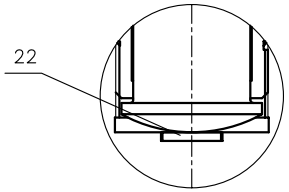

ITEM	NAME	STANDARD MATERIAL SPECITICATIONS		
		API TRIM 8	API TRIM 5	API TRIM 16
1	BODY	ASTM A216 WCB	ASTM A216 WCB	ASTM A352 LCC
2	SEAT	ASTM A105+STL.6	ASTM A105+STL.6	ASTM A350 LF2+STL.6
3	DISC	ASTM A105+ER410	ASTM A105+STL.6	ASTM A350 LF2+STL.6
4	DISC COVER	ASTM A276 410	ASTM A276 410	ASTM A276 316
5	STEM	ASTM A182 F6a	ASTM A182 F6a	ASTM A182 F316
6	GASKET	F304+Flexible Graphite	F304+Flexible Graphite	F316+Flexible Graphite
7	BONNET	ASTM A216 WCB	ASTM A216 WCB	ASTM A352 LCC
8	BOLT	ASTM A193 B7M	ASTM A193 B7M	ASTM A320 L7M
9	NUT	ASTM A194 2HM	ASTM A194 2HM	ASTM A194 4M
10	PIN	CARBON STEEEL	CARBON STEEEL	CARBON STEEEL
11	GLAND FLANGE	ASTM A216 WCB	ASTM A216 WCB	ASTM A352 LCC
12	EYE BLOT	ASTM A193 B7M	ASTM A193 B7M	ASTM A320 L7M
13	EYE NUT	ASTM A194 2HM	ASTM A194 2HM	ASTM A194 4M
14	GEAR BOX	COMMERCIAL		
15	BOLT	CARBON STEEEL	CARBON STEEEL	CARBON STEEEL
16	GLAND	ASTM A276 410	ASTM A276 410	ASTM A276 316
17	PACKING	F304+Graphite	F304+Graphite	F316+Graphite
18	PACKING	Flexible Graphite	Flexible Graphite	Flexible Graphite
19	BACK SEAT	ASTM A276 410	ASTM A276 410	ASTM A276 316
20	RIVET	AISI 304	AISI 304	AISI 304
21	NAME PLATE	AISI 304	AISI 304	AISI 304
22	THRUST PLATE	ASTM A276 410	ASTM A276 410	ASTM A276 316
23	PIN	CARBON STEEEL	CARBON STEEEL	CARBON STEEEL
24	GUIDE	CARBON STEEEL	CARBON STEEEL	CARBON STEEEL

PRESSURE–TEMPERATURE RATING ACCORDING TO ASME B16.34

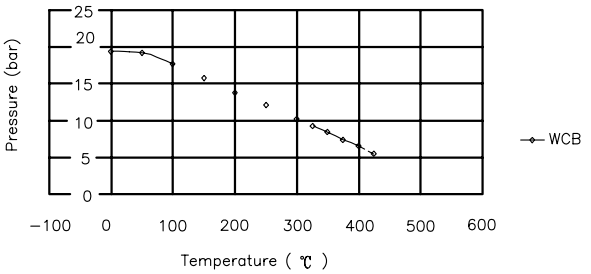

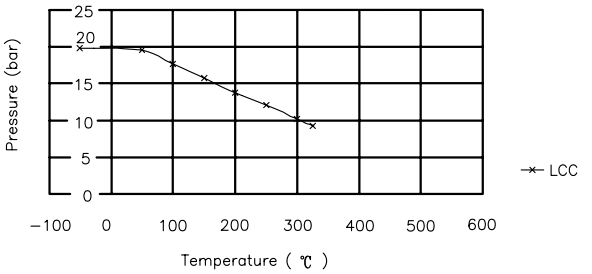

SUITABLE TEMP(℃)	WCB	LCC
ASME B16.34	–29to+425Deg C	–46to+345 Deg C
EU–PED	–5to+425Deg C	–46to+345Deg C
	WATER,STEAM,OIL	

TEST PRESSURE TO API 598 & ASME B16.34		
TEMPERATURE (0~38℃)	WCB	LCC
SHELL TEST (Bar)	29.4	29.7
BACK SHELL TEST(Bar)	21.6	21.8
SEAL TEST (Bar)	21.6	21.8

PROJECT:	----
CLIENT:	----
T.T. REF:	----
ITEM:	----

REV.	DATE	DRAWN	CHECKED
	9-26-2015	WB	JT

TT Valves UK Ltd

	DATE	NAME
TRACED		
CHECKED		

GLOBE VALVE
CLASS–150

SCALE	DRAWING No :	REV:
---		0

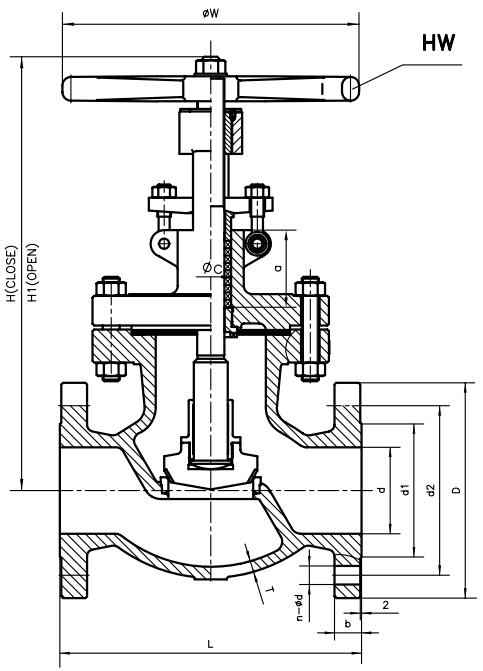

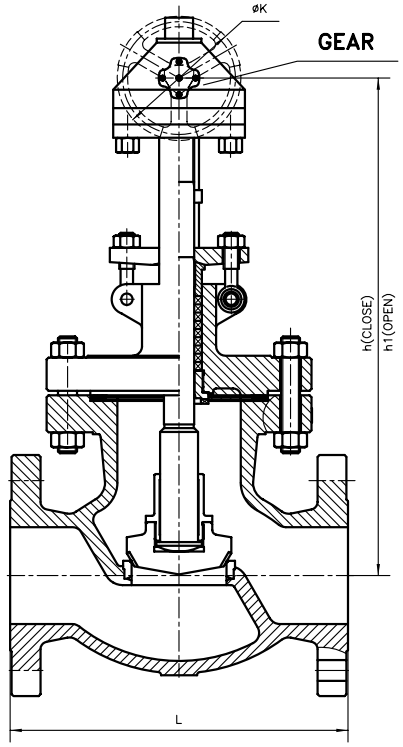

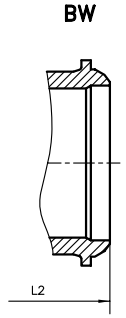

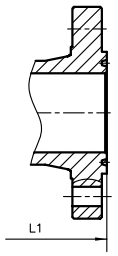

STANDARD	
FACE TO FACE	ASME B16.10
FLANGE ENDS	ASME B16.5
DESIGN STANDARDS	BS1873
TESTING	API 598

SIZE	øc	a	PACKING RING	NO.	MATERIAL
2"	ø33	37	20X6.5	5	GRAPHITE
3"	ø39	37.5	26X6.5	6	GRAPHITE
4"	ø46	50.5	30X7.9	6	GRAPHITE
5"	ø48	50	32X7.9	6	GRAPHITE
6"	ø48	49.5	32X7.9	6	GRAPHITE
8"	ø52	61.5	36X8	7	GRAPHITE
10"	ø61	56.5	42X9.4	6	GRAPHITE
12"	ø78	91	52X12.7	7	GRAPHITE

SIZE	FLANGE DIMENSIONS						BONNET BOLT (MATERIAL B7)
	ød	ød1	ød2	D	b	n-ød	
2"	51	92	120.5	152	16	4-ø19	1/2X75
3"	76	127	152.5	190	19	4-ø19	9/16X80
4"	102	157	190.5	229	24	8-ø19	9/16X85
5"	127	186	216	254	24	8-ø22	9/16X85
6"	152	216	241.5	279	25.4	8-ø22	9/16X90
8"	203	270	298.5	343	29	8-ø22	5/8X105
10"	254	324	362	406	30.5	12-ø25	3/4X120
12"	305	381	432	483	32	12-ø25	3/4X130

SIZE	DIMENSIONS (mm)							WEIGHTS(kg)		FACE TO FACE(mm)		
	T	H	H1	h	h1	W	K	HW	GEAR	L	L1	L2
2"	9	341	358	/	/	200	/	17	/	203	216	203
3"	10.3	375	400	/	/	250	/	36	/	241	254	241
4"	11.2	483	515	/	/	300	/	46	/	292	305	292
5"	11.5	506	540	/	/	300	/	46	/	356	368	356
6"	11.9	517	565	/	/	350	/	77	/	406	419	406
8"	12.7	590	658	755	972	400	460	116	136	495	508	495
10"	14	754	839	904	1179	450	610	202	220	622.3	635	622
12"	16	941	1043	1030	1351	560	610	294	323	698.5	711	698

PROJECT:	----
CLIENT:	----
T.T. REF:	----
ITEM:	----

REV.	DATE	DRAWN	CHECKED
	9-26-2015	WB	JT

TT Valves UK Ltd

	DATE	NAME
TRACED		
CHECKED		

GLOBE VALVE
CLASS-150

SCALE	DRAWING No :	REV:
---		0